Central Asian Research Journal of Natural and Exact Sciences
INTERNATIONAL SCIENTIFIC, APPLIED AND THEORETICAL JOURNAL
2026 / № 1(2)
SCIENCE FOR A SUSTAINABLE CENTRAL ASIA

IMPROVING THE EFFICIENCY OF FIBER-OPTIC COMMUNICATION IN MODERN TELECOMMUNICATION SYSTEMS

M. Abdullayev[1], D. X. Xudoyarov[1], and Y. E. Minamatov[2]

[1] Tashkent State Technical University named after Islam Karimov, Tashkent, Uzbekistan

[2] Sarbon University, Department of Engineering and Digital Technologies, Tashkent, Uzbekistan

M. Abdullayev — Candidate of Technical Sciences, Professor; D. X. Xudoyarov — Master's Student; Y. E. Minamatov — Assistent

maxmudjonabdullayev58@gmail.com,

davronxudoyarov0308@gmail.com

Tel.: +998 91 639 00 94

Abstract. This article analyzes ways to improve the efficiency of fiber-optic communication technologies in modern telecommunication systems. It considers the principal advantages of fiber-optic links, including high data transmission speed, large capacity, resistance to electromagnetic interference, secure information exchange, relatively low energy consumption, and low-loss transmission over long distances. Particular attention is paid to the factors that reduce signal quality, such as attenuation, dispersion, and external interference, and to methods for maintaining reliable transmission through optical amplifiers and regenerators. The article also examines the use of WDM and DWDM technologies for transmitting several signal streams through a single optical fiber and for increasing channel capacity. The role of semiconductor laser sources in generating accurate, high-frequency, and directional optical signals is discussed. In addition, the prospects for integrating fiber-optic systems with artificial-intelligence-based monitoring and control are outlined in relation to 5G, future 6G networks, smart-city technologies, cloud computing, and the Internet of Things. The

analysis shows that fiber-optic communication is a key element of future high-speed digital communication infrastructure and that its further improvement can increase network stability and transmission efficiency.

Keywords: fiber-optic communication, telecommunications, laser technology, DWDM, WDM, signal transmission, information exchange, infocommunication.

Introduction

Today, the rapid development of digital technologies worldwide is sharply increasing the demand for telecommunication systems. The widespread use of Internet networks, mobile communications, cloud technologies, and artificial intelligence systems requires the creation of high-speed and stable information transmission systems. Therefore, fiber-optic communication systems have become one of the most important components of modern telecommunication infrastructure.

Compared with electrical transmission systems, fiber-optic communication systems offer such advantages as high speed, the ability to transmit large volumes of data, resistance to electromagnetic interference, and low-loss signal transmission over long distances. In particular, the development of 5G and future 6G technologies requires further improvements in the efficiency of optical communication systems.

Main Advantages of Fiber-Optic Communication Systems

Fiber-optic communication technology is based on transmitting data using light signals and has high bandwidth [2, p. 45]. In these systems, light pulses generated by laser sources are transmitted through optical fibers.

The main advantages of fiber-optic communication systems are as follows:

– the ability to transmit large volumes of data at high speed;
– transmission of signals over long distances with low loss;
– high resistance to electromagnetic interference;
– a high level of information security;
– relatively low energy consumption;
– stable operation of transmission systems.

Currently, telecommunication operators widely use fiber-optic systems in backbone communication lines. This is because conventional copper-cable transmission systems cannot fully meet the requirements of high-speed data exchange.

Methods for Improving Signal Quality in Modern Telecommunication Systems

Improving signal quality is one of the main issues in telecommunication systems. Signal attenuation, dispersion, and external interference negatively affect data transmission quality. Therefore, a number of modern technologies are used in optical systems.

WDM (Wavelength Division Multiplexing) technology allows several signal streams to be transmitted through a single optical fiber. This significantly increases the capacity of the transmission channel. DWDM technology, in turn, makes it possible to place an even greater number of channels more densely [5, p. 214].

$$C = B \log_2(1 + S/N) \quad (1)$$

The above formula expresses that the capacity of the communication channel depends on the signal-to-noise ratio. As signal quality improves, data transmission efficiency also increases. In addition, the use of modern laser technologies helps improve the accuracy of optical signals. Amplifiers and optical regenerators make it possible to maintain signal quality over long distances.

Physical Factors Affecting Optical-Link Efficiency

Attenuation and the optical power budget

The efficiency of an optical link first depends on whether sufficient optical power reaches the receiver under real operating conditions. Fiber attenuation, connector losses, splice losses, passive splitters, wavelength-selective components, and aging all reduce the available power. A design based only on nominal values may operate correctly during commissioning but become unstable after cable repairs, additional patching, temperature changes, or contamination of optical connectors. Therefore, an engineering reserve should be included in every link calculation [3, 5].

For a point-to-point line, a simplified optical power balance can be written as

follows:

$$P_r = P_t - \alpha L - Lc - Ls + G - M \quad (2)$$

Here, P_r is the received optical power, P_t is the transmitter output power, α is the attenuation coefficient of the fiber, L is the transmission distance, Lc and Ls represent connector and splice losses, G is the total gain of optical amplifiers, and M is the engineering margin. The calculated value must remain above receiver sensitivity and below the overload limit. This approach prevents both insufficient reception and excessive optical power, which may distort the received signal.

Installation quality has a direct influence on this balance. Excessive bending, poor fusion splices, dirty end faces, and unnecessary adapters introduce additional loss and reflections. Optical time-domain reflectometry, insertion-loss measurement, and microscopic connector inspection should therefore be performed during commissioning and repeated after major maintenance. Such procedures do not increase nominal channel capacity, but they improve the useful capacity of the network by reducing errors, retransmissions, and unexpected interruptions.

Dispersion, noise, and nonlinear effects

Signal attenuation is not the only factor that limits transmission. Chromatic dispersion broadens optical pulses because different spectral components propagate at slightly different velocities. At high transmission rates, broadened pulses overlap and make it more difficult for the receiver to distinguish logical states. Polarization-mode dispersion, laser phase noise, amplifier noise, and filtering penalties also become important when the symbol rate and transmission distance increase [3].

Increasing launch power can improve the received signal-to-noise ratio only within a limited range. When optical power becomes too high, nonlinear effects such as self-phase modulation, cross-phase modulation, and four-wave mixing may appear. These effects are especially significant in dense multi-channel systems. Efficient design therefore requires a balanced launch-power level, suitable channel spacing, dispersion-aware modulation, and appropriate error-correction methods rather than maximum

transmitter power.

Efficient Capacity Expansion with WDM and DWDM

WDM and DWDM increase the utilization of an installed fiber by assigning independent data streams to different optical wavelengths. This is economically important because the capacity of an existing route can be expanded without laying a separate cable for each new service. Conventional WDM generally uses wider spacing and a smaller number of channels, while DWDM places channels more densely and is therefore suited to metro, backbone, and long-distance networks [4, 5].

The practical benefit of dense multiplexing depends on accurate wavelength control. Laser-frequency drift, narrow filter passbands, unequal amplifier gain, crosstalk, and accumulated noise may reduce the reliability of individual channels. Channel planning should consequently take into account transmission distance, symbol rate, modulation format, optical signal-to-noise ratio, guard bands, add-drop nodes, and expected future expansion. Flexible allocation of spectral resources can improve utilization when channels with different bandwidth requirements share the same line.

Table 1. Contribution of major technologies to fiber-optic system efficiency

Technology	Primary function	Main benefit	Design condition
WDM	Several optical carriers in one fiber	Increases capacity without installing additional fiber	Filter spacing and component compatibility
DWDM	Dense wavelength allocation	Improves spectral utilization and scalability	Laser stability, OSNR, and nonlinear crosstalk
EDFA / Raman	Optical amplification	Extends reach and reduces electrical regeneration	Noise, gain flatness, and power profile
Coherent reception	Advanced detection and equalization	Improves sensitivity and spectral efficiency	Complexity, latency, and energy consumption
AI-based monitoring	Telemetry and anomaly analysis	Supports preventive maintenance and network stability	Reliable data and validated thresholds

The comparison shows that capacity technologies produce the best result when they are selected together with suitable amplification, modulation, and monitoring. Adding more wavelengths without controlling power and noise may increase aggregate traffic while reducing reliability. On the other hand, unnecessarily large guard bands and

excessive engineering reserve waste available spectrum. The optimal solution is a controlled balance between channel count, transmission reach, modulation complexity, and service availability.

The Role of Laser Technologies in Optical Communication Systems

Laser technologies are an integral part of fiber-optic communication systems. Laser beams make it possible to generate high-frequency and directional signals. Therefore, data can be transmitted with high accuracy.

Semiconductor lasers are widely used in modern telecommunication networks. Their main advantages are compact size, high efficiency, and low energy consumption.

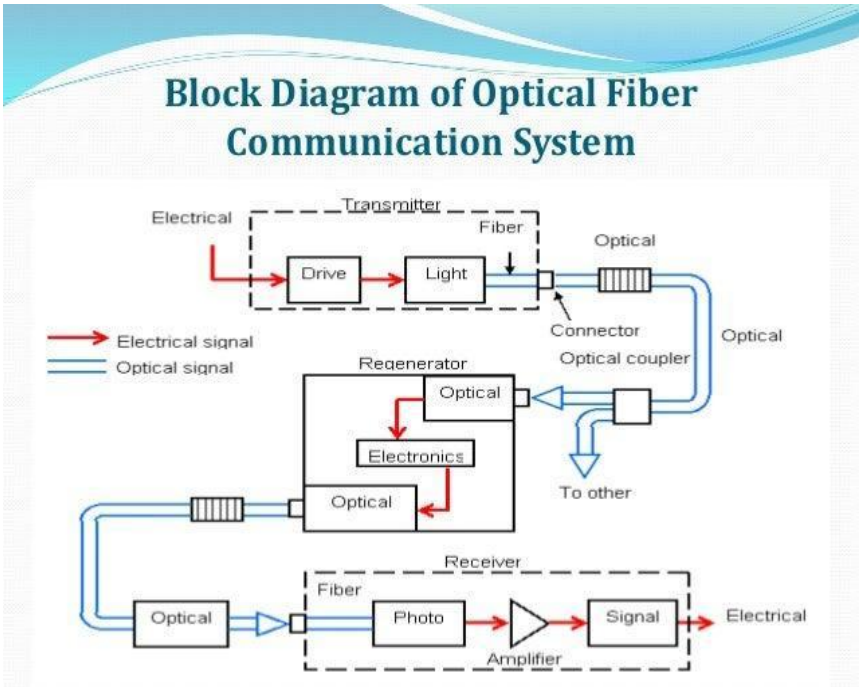

Fig. 1. Functional structure of a fiber-optic communication system.

The use of laser technologies in fiber-optic systems provides the following opportunities:

– increase transmission speed;
– improve signal accuracy;
– reduce noise;
– expand the possibility of long-distance transmission;
– ensure network stability.

In addition, the integration of laser transmission technologies with elements of artificial intelligence will contribute to the creation of automatic signal control systems in the future.

Optical Amplification, Regeneration, and Modulation

Optical amplifiers extend transmission distance without converting each wavelength into the electrical domain. Erbium-doped fiber amplifiers are widely used because they can amplify many channels simultaneously in the principal transmission band. Their use reduces the number of electrical regeneration points and simplifies capacity growth. However, amplifier noise accumulates from span to span, and unequal gain can cause some channels to become stronger than others. Gain equalization and correct amplifier spacing are therefore essential [3, 5].

Raman amplification provides distributed gain along the transmission fiber and may improve the effective signal-to-noise ratio of long routes. Its implementation is more complex because pump wavelengths, safety requirements, and power distribution must be controlled carefully. In practice, hybrid arrangements may combine Raman amplification with erbium-doped amplifiers to obtain a better balance between reach, noise, and operational complexity.

Electrical regeneration remains necessary when accumulated noise, timing distortion, or waveform degradation cannot be corrected reliably by amplification and digital processing. Regenerators restore signal shape, timing, and amplitude, but they increase equipment cost and energy consumption. A technically and economically efficient network uses optical amplification where the signal remains recoverable and introduces regeneration only at locations where it provides a clear improvement in reach, routing flexibility, or service quality.

Modulation also affects efficiency. Direct modulation is simple and economical for short links, whereas external modulation reduces chirp and is more appropriate for higher bit rates and longer distances. Coherent receivers can recover amplitude, phase, and polarization information and use digital signal processing to compensate for

dispersion and other impairments. These capabilities improve spectral efficiency, although they also increase computational complexity and electrical power consumption. The chosen technology should therefore correspond to the real requirements of the network segment.

Intelligent Monitoring and Predictive Maintenance

Modern optical equipment can provide continuous telemetry, including transmitted and received power, laser bias current, module temperature, optical signal-to-noise ratio, pre-correction error rate, Q-factor, and estimated dispersion. When these values are collected over time, gradual deterioration can be detected before it causes a complete service interruption. This creates the basis for condition-based maintenance instead of purely reactive repair.

An intelligent monitoring process may be organized in four stages. First, measurements are collected from transceivers, amplifiers, optical channel monitors, and test instruments. Second, the data are synchronized, cleaned, and compared with commissioning values. Third, threshold rules or machine-learning models identify abnormal trends and probable causes. Finally, the management system generates an alarm, recommends inspection, changes a controllable parameter, or activates a protection route [1, p. 88].

Artificial intelligence should complement physical engineering principles rather than replace them. An alarm is more useful when it can be connected to a measurable cause such as increased connector loss, unstable laser temperature, reduced amplifier output, or a change in the route. For this reason, monitoring models require reliable training data, explainable indicators, validated thresholds, and fallback rules. Combining statistical analysis with power-budget and device constraints increases confidence in automated decisions.

Development Prospects of Telecommunication Systems

In the future, the importance of fiber-optic communication technologies in telecommunication systems will continue to increase. The widespread use of 5G and 6G

networks, smart-city technologies, cloud computing systems, and Internet of Things devices will increase the demand for high-speed transmission systems.

At the same time, the use of artificial intelligence technologies in optical communication systems makes it possible to organize automatic network monitoring, predict signal losses, and improve transmission efficiency [1, p. 88].

Currently, large-scale projects to modernize fiber-optic communication infrastructure are being implemented in many developed countries. This is one of the important factors in the global digital transformation process.

Practical Optimization of Fiber-Optic Links

A practical efficiency-improvement program should begin with measurement rather than with immediate replacement of equipment. The route must be characterized by measuring total loss, splice quality, connector reflectance, dispersion, and the condition of passive components. These results create a baseline against which later changes can be evaluated. Without a baseline, a gradual decrease in performance may remain unnoticed until the error rate rises sharply.

After measurement, the optical power budget should be recalculated using realistic values and a justified reserve. The reserve must be sufficient for aging, repairs, and environmental variation, but it should not be so large that it leads to unnecessary amplifiers or reduced link length. The wavelength plan, modulation format, error-correction mode, and amplifier configuration should then be selected jointly, because a change in one parameter affects the tolerances of the others.

Capacity expansion should begin only after the remaining power margin, filter compatibility, and amplifier loading have been verified. Step-by-step activation and channel testing reduce the risk that a nominal upgrade will create instability or shorten equipment life.

Implementation Challenges and Limitations

Advanced optical technologies are limited by cost, compatibility, and personnel requirements. DWDM equipment, coherent transceivers, wavelength-selective devices,

and monitoring platforms may require substantial investment. Existing fibers and passive components may also have been installed for lower transmission rates. A technical audit is therefore necessary before modernization.

Energy consumption and cybersecurity must be evaluated together with capacity. Higher-order modulation, strong error correction, and complex digital processing increase performance but also require more computation. Incorrect telemetry or poorly selected thresholds may generate false alarms. Protected management channels, validated models, and manual verification are therefore important for critical operational decisions.

Conclusion

In conclusion, fiber-optic communication systems are one of the most important components of modern telecommunication infrastructure. These technologies provide high-speed, reliable, and secure information transmission. The use of WDM and DWDM technologies, laser systems, and signal amplification methods significantly improves transmission efficiency.

In the future, optical communication technologies integrated with artificial-intelligence-based control systems will help advance the telecommunications sector to a new stage. Therefore, expanding scientific research on improving fiber-optic communication systems is of great importance.

References

1. Hui R. Introduction to fiber-optic communications. – Academic Press, 2025.

2. Agrawal G. P. Fiber-optic communication systems. – John Wiley & Sons, 2012.

3. Davis C. C., Murphy T. E. Fiber-optic communications //IEEE Signal Processing Magazine. – 2011. – Т. 28. – №. 4. – С. 147-150.

4. Matchonov, S.: Fundamentals of Artificial Intelligence. Fan, Tashkent, 142 pp. (2021).

5. Ahmedov, D.: Telecommunication Systems and Networks. Tashkent, 256 pp.

(2020).

6. Agrawal, G.P.: Fiber-Optic Communication Systems. Wiley, New York, 620 pp. (2019).

7. Govind, P.: Optical Networks and Communication Systems. London, 488 pp. (2021).

8. Senior, J.: Optical Fiber Communications: Principles and Practice. Pearson Education, 550 pp. (2020).

9. Dike J. N., Ogbe D. A. Optimizing the efficiency of Fiber-Optics Technology in Telecommunications systems //2013 IEEE International Conference on Emerging & Sustainable Technologies for Power & ICT in a Developing Society (NIGERCON). – IEEE, 2013. – С. 135-142.

10. Konyshev V. A. et al. Trends of and prospects for the development of fiber-optic communication systems //Bulletin of the Lebedev Physics Institute. – 2023. – Т. 50. – №. Suppl 4. – С. S435-S450.

11. Mane S. Fiber Optics in Communication Networks: Trends, Challenges, and Future Directions //International Journal of All Research Education and Scientific Methods (IJARESM). – 2023. – Т. 607. – С. 612.

12. Ibrahimov B. G. et al. Research and analysis efficiency fiber optical communication lines using quantum technology //T-Comm-Телекоммуникации и Транспорт. – 2021. – Т. 15. – №. 10. – С. 50-54.

13. Veeranna D. G. et al. Fiber optic communication: evolution, technology, recent developments, and future trends //Modeling and Optimization of Optical Communication Networks. – 2023. – С. 163-177.

14. Ezeh G., Ibe O. Efficiency of optical fiber communication for dissemination of information within the power system network //IOSR Journal of Computer

Engineering (IOSR-JCE). – 2013. – T. 12. – №. 3. – C. 68-75.